W.S. WOODMACHINERY LTD
UNIT 9, 36 HORNOCK ROAD
GARTSHERRIE INDUSTRIAL ESTATE
COATBRIDGE
ML5 2QA
TEL. 01236 432700
E-mail: info@wswoodmachinery.com

W.S. WOODMACHINERY LTD
UNIT 9, 36 HORNOCK ROAD
GARTSHERRIE INDUSTRIAL ESTATE
COATBRIDGE
ML5 2QA
TEL. 01236 432700
E-mail: info@wswoodmachinery.com

OPEN TABLE

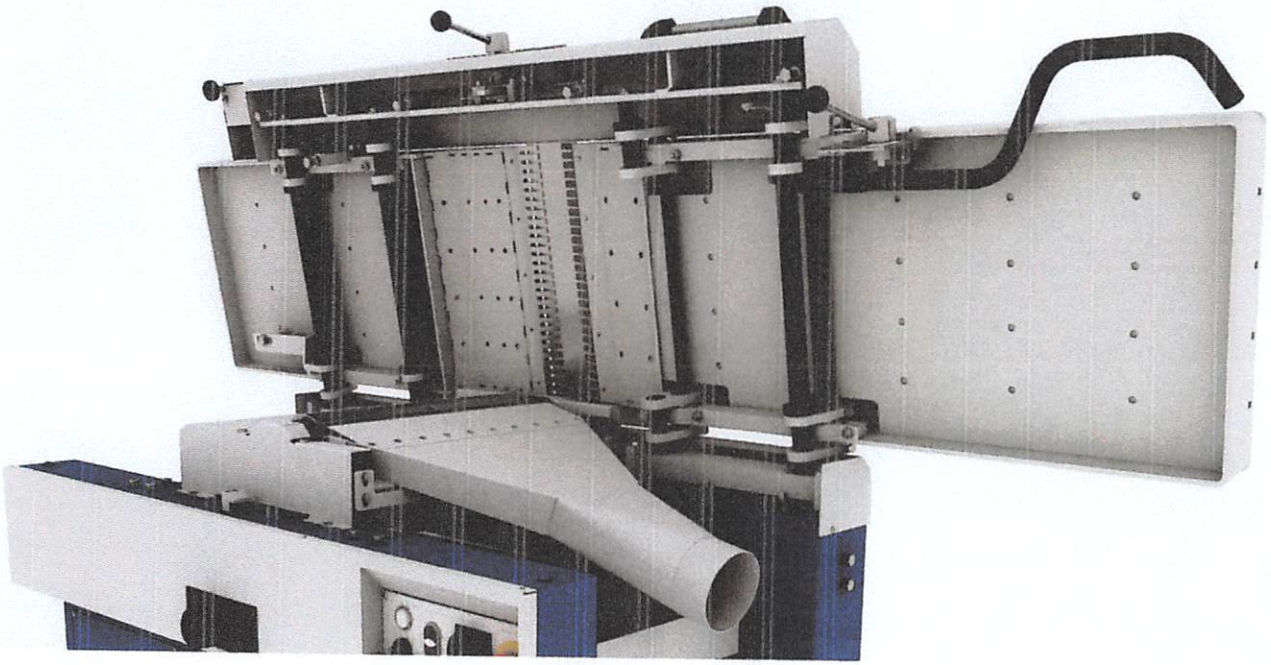

[S] TABLE LOCK HANDLE

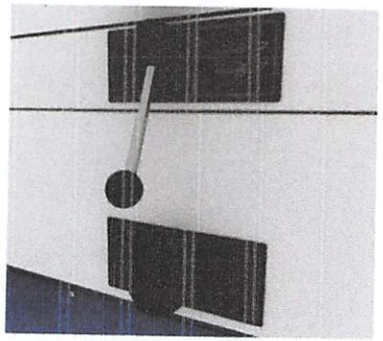

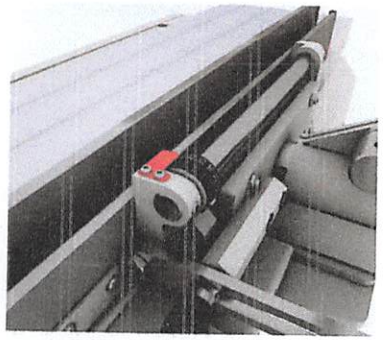

[S] ADJUSTEMENT OF TILTABLE FENCE

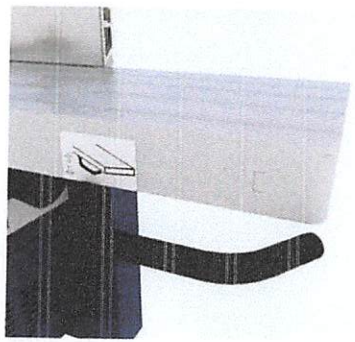

[S] ADJUSTEMENT OF WORKPIECE REMOVAL

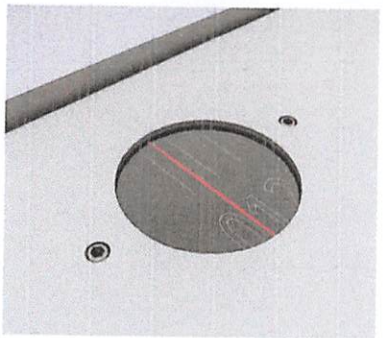

[S] DEPTH OF CUT INDICATOR

HOUFEK

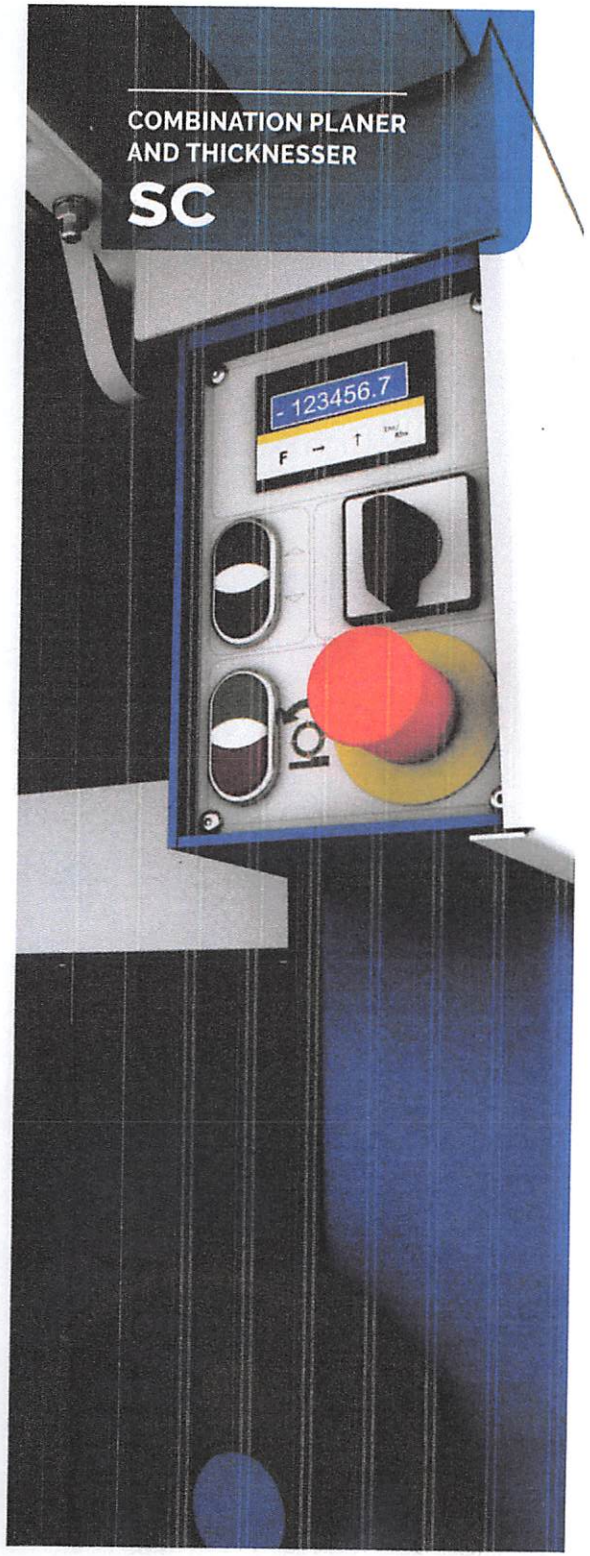

[S] CONTROL PANEL OF SURFACE PLANER

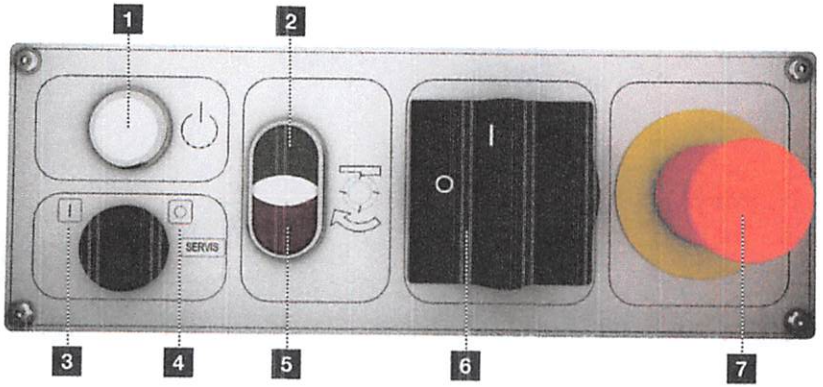

1. Safety ready-to-start button [S]
2. Start button [S]
3. Machine mode: ON [S]
4. Machine mode: Service [S]
5. Stop button [S]
6. Main switch [S]
7. Emergency stop [S]

W.S. WOODMACHINERY LTD
UNIT 9, 36 HORNOCK ROAD
GARTSHERRIE INDUSTRIAL ESTATE
COATBRIDGE
ML5 2QA
TEL. 01236 432700
E-mail: info@wswoodmachinery.com

[S] CONTROL PANEL OF THICKNESSER

1. Digital measuring [S]
2. Electronic positioning machine [S]
3. Start button [S]
4. Stop button [S]
5. Emergency stop [S]
6. Movement of the workpiece 1R / 2R [S]

STANDARD AND OPTIONAL EQUIPMENT

[O] FOLDABLE CUTTERHEAD GUARD

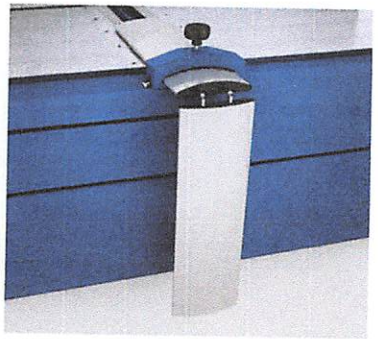

[O] AUXILIARY FENCE FOR PROCESSING NARROW WORKPIECES

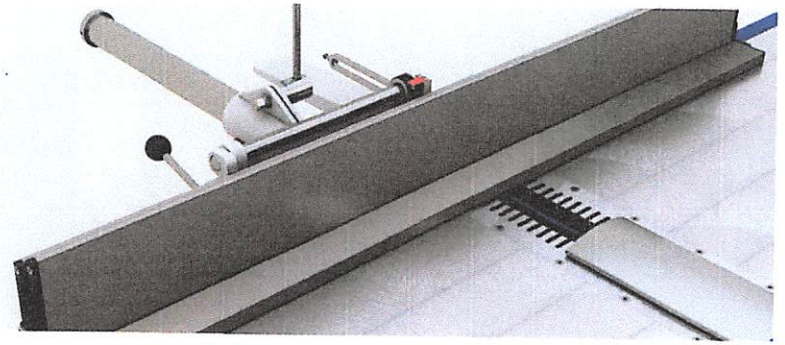

[O] CUTTERHEAD FOR KNIVES TYPE „TERSA" FOR SC 330, SC 430, SC 530

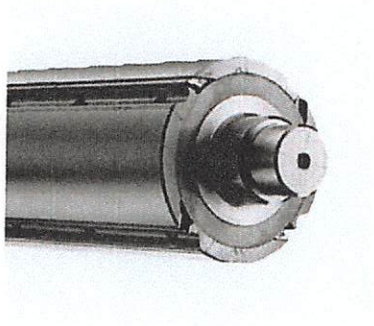

[O] KNIFE SETTING DEVICE WITH INDICATOR

Standard equipment

- Total length of work tables of surface planer SC 330, SC 430 - 2150 mm
- Total length of work tables of surface planer SC 530 - 2350 mm
- Simultaneous opening of surface planer tables
- Size of fence 1300x150 mm
- Tiltable planer fence 0°- 45°
- Length of thicknesser work table - 1000 mm
- Manual thicknesser table height adjustment with height scale
- Thicknesser table support - 4 points
- Infeed pressure segments
- Serrated infeed roller
- Outfeed roller
- Min - max. working height 3 - 250 mm
- Cutter head Ø 120 mm, 4 knives
- Automatic star/delta switch
- Two feed speeds 6/12 m/min
- Electromagnetic brake
- CE certification

Optional equipment

- Motor 5,5HP (4kW) for SC 330. 7,5HP (5,5kW) for SC 430, 10HP (7,5kW) for SC 530
- Foldable cutterhead guard
- Auxiliary fence for processing narrow workpieces
- Front and rear table extension rollers - thicknesser
- Motorized thicknessing table height adjustment with two speed
- Two height adjustable rollers in thicknesser table
- Mechanical measuring of table position - thicknesser
- Electronic measuring of table position with digital display - thicknesser
- Grooved work table - surface planer
- Grooved work table - thicknesser
- Spiral cutterhead with insert knives for SC 330, SC 430, SC 530
- Cutterhead for knives type „Tersa" for SC 330, SC 430, SC 530
- Knife setting device with indicator

W.S. WOODMACHINERY LTD
UNIT 9, 36 HORNOCK ROAD
GARTSHERRIE INDUSTRIAL ESTATE
COATBRIDGE
ML5 2QA
TEL. 01236 432700
E-mail: info@wswoodmachinery.com

HOUFEK

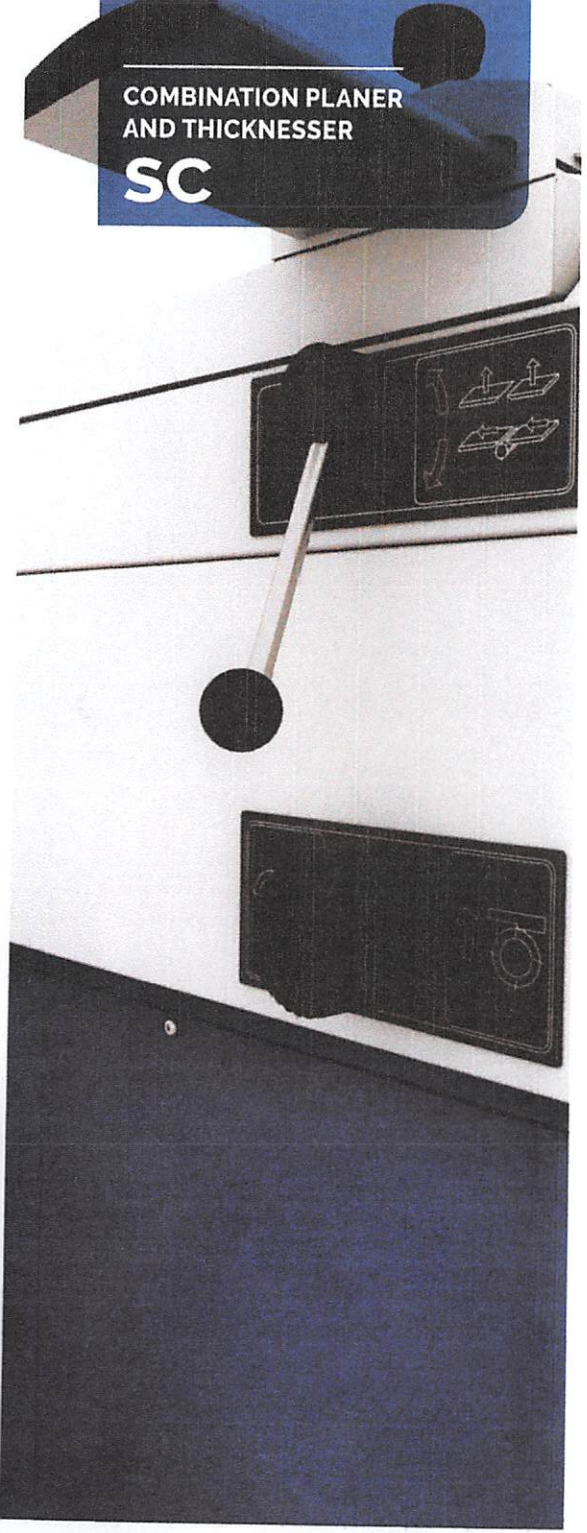

COMBINATION PLANER AND THICKNESSER

SC

W.S. WOODMACHINERY LTD
UNIT 9, 36 HORNOCK ROAD
GARTSHERRIE INDUSTRIAL ESTATE
COATBRIDGE
ML5 2QA
TEL. 01236 432700
E-mail: info@wswoodmachinery.com

[O] FRONT AND REAR TABLE EXTENSION ROLLERS - THICKNESSER

SC		330	430	530
Work table length infeed/outfeed	mm	950/1150	950/1150	1050/1250
Work table width	mm	350	430	530
Max. working width	mm	330	430	530
Cutterhead diameter	mm	120	120	120
Cutterhead speed	rpm	4600	4600	4600
Number of knives	pcs	4	4	4
Max. depth of cut	mm	5	5	5
Motor	kW	3	4	5,5
Motor speed	rpm	2880	2880	2880
Exhaust outlet	mm	120	120	150
Min. exhaust capacity	m^3/hr	1800	2000	2500
Exhaust air speed	m/s	22	22	22
Knives dimensions	mm	350×35×3	450×35×3	550×35×3
Tiltable fence	°	0–45	0–45	0–45
Machine dimension (L/W/H)	mm	2160×900×1200	2160×1000×1200	2360×1200×1200
Weight	kg	690	770	850